Variable Length Subnet Mask

Course Code: CSC 3116 Course Title: Computer Networks

Dept. of Computer Science
Faculty of Science and Technology

Lecturer No:	3	**Week No:**		**Semester:**	Summer 22-23
Lecturer:	*Sharifa Rania Mahmud; rania@aiub.edu*				

Lecture Outline

1. Introduction
2. VLSM
   - Steps of VLSM
   - Example 1
   - Example 2
3. Homework

Introduction

Problems of Large Network

- A large network is difficult to manage
- Less security as each host of the network can reach all other hosts.
- Huge broadcast domain, thereby large bandwidth consumption
- Waste of unused IP addresses

Introduction….

How to overcome the problems?

Dividing a large network into several smaller networks, called subdivided networks or subnets.

Introduction....

For classful addressing

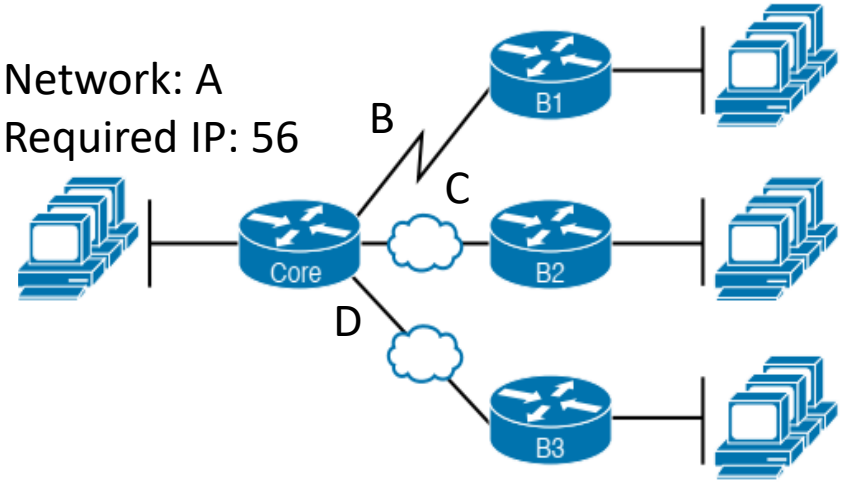

Network	No. of IP addresses allocated
A	256
B	256
C	256
D	256
E	256
F	256
G	256

Introduction

- Required IPs: 56+5+21+26+4+4+4=120
- Classful address
  - No. o allocated IPs: 256×7=1792 IP
  - Percentage of unused IP=$\frac{(1792-120)\times 100}{1792}$ =93% (approx.)

Introduction

Is there any way to further reduce the unused IP addresses?

Yup!

Instead of giving the same number of IP addresses to all subnets, allocate different number of IP addresses depending on each subnet's needs.

VLSM

- Variable Length Subnet Mask (VLSM)
- Instead of allocating the same number of IP addresses to all networks, the number of IP addresses allocated to network depends on the network's need.
- Different network is provided with different number of IPs

VLSM

Steps of VLSM

- *Step 1:* Write the networks' names and IP requirements in descending order of IP requirements.

  A (56), G(26), F(21), E(5), B(4), C(4), D(4)

- Step 2: Find the number of host bits needed to satisfy the IP requirement of each subnet?

- *Step 3:* Based on the number of host bits, find the subnet mask for each subnet.

- *Step 4:* Allocate IPs to each subnet starting from the beginning of the IP block. Allocate IPs to subnet sequentially according to the sorted network sequence found in Step 1.

VLSM....

Example 1

11111111. 11111111. 11111111. 11000000

26 6

Subnet	No. of IPs required	How many bits to borrow	No. of allocated IPs	No. of host bits No. of net bits	Subnet mask	Allocated IP range
A	56	$2^6 > 56 > 2^5$	64	$x = 6,$ $y = 32 - 6 = 26$	255.255.255.192	192.168.5.0- 192.168.5.63/26
G	26	$2^5 > 26 > 2^4$	32	$x = 5,$ $y = 32 - 5 = 27$	255.255.255.224	192.168.5.64- 192.168.5.95/27
F	21	$2^5 > 21 > 2^4$	32	$x = 5,$ $y = 32 - 5 = 27$	255.255.255.224	192.168.5.96- 192.168.5.127/27
E	5	$2^3 > 5 > 2^2$	8	$x = 3,$ $y = 32 - 3 = 29$	255.255.255.248	192.168.5.128- 192.168.5.135/29
B	4	$2^2 = 4$	4	$x = 2,$ $y = 32 - 2 = 30$	255.255.255.252	192.168.5.136- 192.168.5.139/30
C	4	$2^2 = 4$	4	$x = 2,$ $y = 32 - 2 = 30$	255.255.255.252	192.168.5.140- 192.168.5.143/30
D	4	$2^2 = 4$	4	$x = 2,$ $y = 32 - 2 = 30$	255.255.255.252	192.168.5.144- 192.168.5.147/30

VLSM....

Example 1

VLSM

No. of allocated IPs: 64+32+32+8+4+4+4=148 IP

Percentage of unused IP=$\frac{(148-120)\times 100}{148} = 19\%$ (approx.)

Percentage of unused IP address (for the given network)

Classful Addressing	VLSM
93%	19%

VLSM….

Is it possible to further reduce the unused IP?

Spend your time to propose a new subnetting technique.

VLSM....

Example 2

- Suppose that we have three networks: A, B and C with IP requirements 50, 4 and 28. If You are given an IP block 130.3.0.0, allocate IPs performing subnetting.

Subnet	No. of IPs required	How many bits to borrow	No. of allocated IPs	No. of host bits No. of net bits	Subnet mask	Allocated IP range
A	50	$2^6 > 50 > 2^5$	64	$x = 6,$ $y = 32 - 6 = 26$	255.255.255.192	130.3.0.0-130.3.0.63/26
C	28	$2^5 > 28 > 2^4$	32	$x = 5,$ $y = 32 - 5 = 27$	255.255.255.224	130.3.0.64-130.3.0.95/27
B	4	$2^2 = 4$	4	$x = 2,$ $y = 32 - 2 = 30$	255.255.255.252	130.3.0.96-130.3.0.99/30

Homework

1. Suppose that we have three networks: A, B and C with IP requirements 500, 4000 and 208, respectively. If You are given an IP block 130.3.0.0, allocate IPs performing subnetting.

2. Suppose that we have six networks: A, B, C, D, E and F with IP requirements 120, 4 and 9, 4, 32, 7, respectively. If You are given an IP block 210.3.0.0, allocate IPs performing subnetting.

References

[No reference]

Recommended Books

1. Official Cert Guide CCNA 200-301 , vol. 1, *W. Odom*, Cisco Press, First Edition, 2019, USA.

2. CCNA Routing and Switching, *T. Lammle*, John Wily & Sons, Second Edition, 2016, USA.